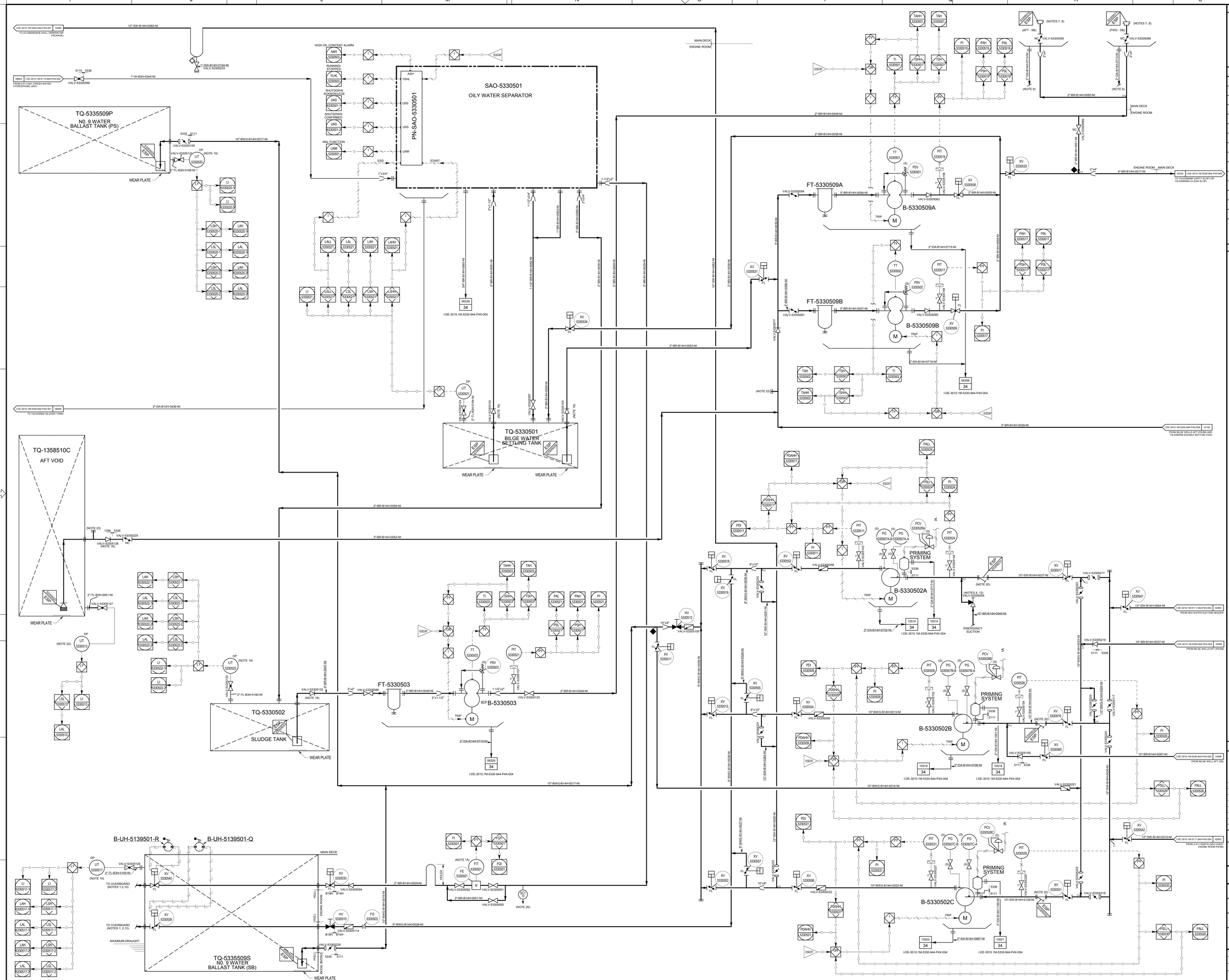

REFERENCE DOCUMENTS

I-MD-3010.1M-1200-940-P4X-017 - DESCRIPTIVE MEMORANDUM - GENERAL
I-DE-3010.1M-1200-944-P4X-001 - GENERAL NOTES
I-ET-3010.1M-1200-200-P4X-002 - PIPING SPECIFICATION FOR HULL
I-ET-3000.00-0000-940-P4X-002 - SYMBOLS FOR PRODUCTION UNITS DESIGN
I-ET-3000.00-1200-940-P4X-001 - TAGGING PROCEDURE FOR PRODUCTION UNITS DESIGN
I-DE-3010.1M-1300-960-P4X-002 - CAPACITIES PLAN
I-ET-3010.00-1200-800-P4X-013 - GENERAL CRITERIA FOR INSTRUMENTATION PROJECTS
I-ET-3010.00-1200-800-P4X-022 - AUTOMATION, CONTROL AND INSTRUMENTATION ON PACKAGE UNITS
I-ET-3010.00-1200-940-P4X-001 - SYSTEMS OPERATION PHILOSOPHY
I-ET-3010.1M-1200-800-P4X-014 - AUTOMATION INTERFACE OF PACKAGE UNITS
I-ET-3010.1M-1300-200-P4X-001 - HULL PIPING PRACTICE

EQUIPMENT

TAG	DESCRIPTION	TYPE	CAPACITY
B-5330502A/C (3 x 100%)	BALLAST (AFT), BILGE AND GENERAL SERVICE PUMP	CENTRIFUGAL	330.0 m³/h
B-5330503 (1 x 100%)	SLUDGE PUMP	PROGRESSIVE CAVITY	5.0 m³/h
B-5330509A/B (2 x 100%)	AUXILIARY BILGE PUMP	RECIPROCATING	10.0 m³/h
FT-5330503 (1 x 100%)	SLUDGE PUMP FILTER	BASKET	5.0 m³/h
FT-5330509A/B (2 x 100%)	AUXILIARY BILGE PUMP FILTER	BASKET	10.0 m³/h
PN-SAO-5330501 (1 x 100%)	OILY WATER SEPARATOR PACKAGE CONTROL PANEL	CONTROL PANEL	-
SAO-5330501 (1 x 100%)	OILY WATER SEPARATOR	WATER AND OIL SEPARATION	5.0 m³/h - 15ppm
TQ-1358510C (1 x 100%)	AFT VOID	STRUCTURAL	3090.1 m³
TQ-5330501 (1 x 100%)	BILGE WATER SETTLING TANK	STRUCTURAL	126.044 m³
TQ-5330502 (1 x 100%)	SLUDGE TANK	STRUCTURAL	37.398 m³
TQ-5335509P (1 x 100%)	NO. 9 WATER BALLAST TANK (PS)	STRUCTURAL	3991.5 m³
TQ-5335509S (1 x 100%)	NO. 9 WATER BALLAST TANK (SB)	STRUCTURAL	3991.548 m³
B-UH-5139501-Q (1 x 100%)	LOCAL HYDRAULIC ACTUATION PUMP	LOCAL HYDRAULIC ACTUATION	6.0 cm³/s per double stroke/max 135 bar
B-UH-5139501-R (1 x 100%)	LOCAL HYDRAULIC ACTUATION PUMP	LOCAL HYDRAULIC ACTUATION	6.0 cm³/s per double stroke/max 135 bar

GENERAL NOTES

BILGE SYSTEM CALCULATION - CLASSIFICATION SOCIETY RULES

L - LENGHT OF ENGINE ROOM = 27.00 m
B - BREADTH OF THE VESSEL = 60.00m
D - MOLDED DEPTH = 33.80m

a) DIAMETER OF BILGE BRANCHES (d1)
$d1 = 25 + 2.16\sqrt{L(B+D)} = 25 + 2.16\sqrt{27.00(60.00 + 33.80)}$
d1 = 133.20 mm
NOMINAL DIAMETER = 6", ADOPTED CARBON STEEL PIPE 8"

b) DIAMETER OF BILGE MAIN (d)
CRITERIA: NOT LESS THAN TWICE THE REQUIRED CROSS SECTIONAL AREA OF THE ENGINE ROOM BRANCH BILGE LINE
$Ad = 2 \times \frac{\pi}{4} \times (133.20)^2$
Ad=278.68 cm²
d=188.37
ADOPTED CARBON STEEL PIPE 8"

c) CAPACITY OF THE BILGE PUMP (Q)
$Q = \frac{5.75d^2}{10^6}$
$Q = \frac{5.75 \times 188.37^2}{10^6}$
Q = 200.48 m³/h
ADOPTED 2 (TWO) PUMPS WITH 250m³/h.

d) WATER VELOCITY IN BILGE MAIN.
CRITERIA: NOT LESS THAN 2m/s
$V = \frac{200 \times 1000}{322.70 \times 3600}$
V = 2.15 m/s > 2.0 m/s

e) EMERGENCY SUCTION OF ENGINE ROOM WILL BE DONE BY B-5330502A. CAPACITY 330m³/h.

1 - PIPE CONNECTIONS FITTED BETWEEN THE SHELL AND THE VALVES ARE TO BE AT LEAST EXTRA HEAVY, IN ACCORDANCE WITH DNV RULES.
2 - SHIP SIDE SHELL VALVES, SHALL COMPLY WITH CLASSIFICATION SOCIETY - DNV RULES.
3 - SYSTEM DATA: HOLDS
BALLAST (AFT), BILGE AND GENERAL SERVICE PUMPS:
WORKING PRESSURE = 392.40 kPag
DESIGN PRESSURE = 1.5 x 392.40 kPag = 588.60 kPag
TEST PRESSURE = 1.5 x 588.60 kPag = 882.90 kPag
WORKING TEMPERATURE = 50° C
DESIGN TEMPERATURE = 57.2° C
AUXILIARY BILGE PUMP:
WORKING PRESSURE = 392.40 kPag
DESIGN PRESSURE = 1.5 x 392.40 kPag = 588.60 kPag
TEST PRESSURE = 1.5 x 588.60 kPag = 882.90 kPag
WORKING TEMPERATURE = 50° C
DESIGN TEMPERATURE = 60° C
SLUDGE PUMP:
WORKING PRESSURE = 392.40 kPag
DESIGN PRESSURE = 1.5 x 392.40 kPag = 588.60 kPag
TEST PRESSURE = 1.5 x 588.60 kPag = 882.90 kPag
WORKING TEMPERATURE = 50° C
DESIGN TEMPERATURE = 60° C
4 - VALVE VALV-5330504 HANDWHEEL SHALL BE POSITIONED ON THE FIRST ACCESSIBLE FLOOR, IN ORDER TO ALLOW VALVE MANUAL ACTUATION IN CASE OF ENGINE ROOM FLOODING, TO COMPLY WITH CLASSIFICATION SOCIETY REQUIREMENTS. A WARNING PLATE INDICATING THAT "THE VALVES MAY BE OPENED ONLY IN EMERGENCY CONDITION." "AS VÁLVULAS PODERÃO SER ABERTAS SOMENTE NA CONDIÇÃO DE EMERGENCIA" SHALL BE PLACED IN THE HANDWHEEL.
5 - THE DISCHARGE OF SEPARATED WATER FROM OIL WATER SEPARATOR OF ENGINE ROOM DRAINAGE SHALL NOT EXCEED 15 ppm - MARPOL ANNEX I REG. 21.
6 - ALL SINGLE FILTER SHALL BE SUPPLIED WITH VENT AND DRAIN.
7 - INTERNATIONAL SHORE CONNECTION (MAIN DECK SLUDGE DISCHARGE STATION): DIMENSION SHALL COMPLY WITH CLASSIFICATION SOCIETY RULES.
8 - MAIN DECK SLUDGE DISCHARGE STATION SHALL BE INSTALLED AS NEAR AS POSSIBLE TO THE DIESEL OIL/ FRESH WATER RECEIVING STATIONS.
9 - THE DRAIN OF MAIN DECK SLUDGE DISCHARGE SHALL BE LED TO THE NEAREST MAIN DECK DRAINING BOX (AN ADEQUATE SLOPE SHALL BE PROVIDED FOR THIS LINE TO COMPENSATE THE TRIM ANGLE).
10 - MINIMUM 1000mm ABOVE MAXIMUM DRAFT.
11 - ALL FILTERS IN BILGE SYSTEM HAVE MESH OF 700 MICRONS.
12 - THE EMERGENCY SUCTION SHALL BE LOCATED IN THE OTHER SIDE OF THE SHIP FROM WHERE THE DIRECT SUCTION IS LOCATED.
13 - THE BILGE WATER SEPARATOR SHALL COMPLY WITH IMO RESOLUTION.
14 - CANCELLED.
15 - THE OILY WATER SEPARATOR OVERBOARD DISCHARGE LINE SHALL BE PROVIDED WITH A FLOWMETER TO COMPLY WITH THE IBAMA REQUIREMENTS FOR ALL OIL WATER OVERBOARD DISCHARGE(S) TO THE SEA.
16 - CANCELLED.
17 - CANCELLED.
18 - THE CHECK VALVE SHALL BE INSTALLED NEAR THE TANK PENETRATION TO AVOID AIR IN THE LINE.
19 - THE LEVEL INDICATOR TRANSMITTERS LIT-5330517/520/522 ARE INCLUDED AT HULL STRUCTURAL TANKS LEVEL, INTERFACE, PRESSURE AND TEMPERATURE MONITORING SYSTEMS PACKAGE. THESE INSTRUMENTS SHALL HAVE TWO INDEPENDENT OUTPUTS SIGNALS, ONE SHALL BE CONNECTED TO THE REMOTE ULLAGE, PRESSURE AND TEMPERATURE MONITORING PANEL (PN-1358501) AND OTHER SHALL BE CONNECTED TO HULL CONTROL SYSTEM (HCS).
20 - FILTER Y FOR COMISSIONING.
21 - WEAR PLATES WILL BE WELDED NEAR ALL SUCTION AND DISCHARGE LINES OF THE STRUCTURAL TANKS BULKHEADS.
22 - THE LIT DISPLAY SHALL BE LOCATED AT LOWER PLATFORM.
23 - CONNECTION FOR FILLING THE LINE IN CASE OF LOSS OF PRIMING.
24 - CANCELLED.
25 - THIS P&ID SHALL BE UPDATED DURING THE DETAIL DESIGN PHASE FOLLOWING ALL THE EQUIPMENT MANUFACTURER'S RECOMMENDATION.
26 - SAMPLE POINT. FOR MORE DETAILS, SEE THE DOCUMENT
I-ET-3010.00-1200-588-P4X-001 - SAMPLE CONNECTIONS.
27 - ALL HV AND XV VALVES OF THIS P&ID ARE FULLY REPRESENTED ON PAGE 5 OF I-DE-3010.1M-1200-944-P4X-001 - GENERAL NOTES.
28 - PUMPS B-5330502A/C ARE NOT ESSENTIAL LOADS.
29 - FOR VENT & SOUNDING OF THESE TANKS, SEE DRAWING
I-DE-3010.1M-5415-944-P4X-004 - VENTING AND SOUNDING SYSTEM.

HOLD TABLE

1 - CANCELLED.
2 - PSV SET PRESSURE.
3 - SIPHON HEIGHT.
4 - FINAL SYSTEM DATA TO BE REVISED DURING DETAILED DESIGN PHASE.

REV.	DESCRIPTION	DATE	EXEC.	CHECK	APPROV.
F	REVISED WHERE INDICATED	24 Jul 2020	GMONTERO	BAVILA	CHRISTINO
E	REVISED WHERE INDICATED	28 Jun 2020	GMONTERO	BAVILA	CHRISTINO
D	REVISED WHERE INDICATED	19 Jun 2020	GMONTERO	RODBAT	CHRISTINO
C	REVISED WHERE INDICATED	10 Mar 2020	APMOREIRA TQP	BAVILA	CHRISTINO
B	REVISED ACCORDING TO HAZOP COMMENTS	13 Sep 2019	APMOREIRA TQP	BAVILA	CHRISTINO
A	REVISED WHERE INDICATED	19 Jun 2019	GMONTERO	RODBAT	CHRISTINO
0	ORIGINAL ISSUE	22 May 2019	APMOREIRA TQP	RODBAT	CHRISTINO

INFORMATION IN THIS DOCUMENT IS PROPERTY OF PETROBRAS, BEING PROHIBITED OUTSIDE OF THEIR PURPOSE.
FORM OWNED TO PETROBRAS N-381 REV. L.

SPPID/V2D141-DE-3010.1M-5330-944-P4X-001_F.pdf

PETROBRAS — DP&T-SRGE

CLIENT: SRGE

JOB: REFERENCE BASIC DESIGN

AREA: BÚZIOS

TITLE: PIPING AND INSTRUMENT DIAGRAM
BILGE, SLUDGE, BALLAST (AFT) AND GENERAL SERVICE SEAWATER SYSTEM

DESIGN	ESUP	EXEC.	APMOREIRA TQP	CHECK	RODBAT	APPROV.	CHRISTINO
SCALE	NO SCALE	DRAWING	1001056398 0010	SHEET	01 of 01		
		NP-1		ESUP			
DATE	5/22/2019	No.	I-DE-3010.1M-5330-944-P4X-001				

A0 1189mm X 841mm